TEEKAY FLANGE ADAPTORS

- Flange Adaptors for connecting to plain end pipe systems
- Joins any standard or non-standard flange drilling to any standard or non-standard pipe material
- Introduces flexibility into otherwise rigid pipe arrangements
- Enables the final connection to be made via the coupling lockpart, rather than through a mating flange
- Allows for generous tolerances and adjustments
- Ideal for valve chambers or other areas of limited or difficult access

- Sizes 50mm to 3000mm
- All drillings available
- EPDM or NBR gaskets
- Coated or stainless steel options
- Customised dimensional requirements accommodated

- A modern approach to the joining of plain ended pipes, utilising materials of the highest quality in a weight, space, time and cost saving combination
- Teekay Flange Adaptors have been used all over the world for over a quarter of a century as a first choice permanent pipe joining method

TEEKAY FLANGE ADAPTORS

Teekay Flange Adaptors are used to join plain-ended pipes to valves, pumps, meters, flanged pipes, fittings and specials, facilitating the installation, replacement or removal of these components from the pipeline.

Teekay Flange Adaptors are suitable for use with any plain-ended pipes from 50mm (2") – 3000mm (120") pipe nominal bore. Due to the flexibility of our production, flange adaptors can be readily supplied to suit all pipe outside diameters within this range, enabling them to be used with any pipe material. Flange drillings can be supplied to meet virtually all British, American and International dimensional standards. Universal Flanges are also available.

Teekay Flange Adaptors offer the Pipeline Designer and Installer all the benefits of the Teekay Axiflex Coupling allowing for pipe movement, expansion and contraction, angular deflection and lateral displacement. A great deal of flexibility is introduced into the installation which is especially important when trying to align bolt holes on flanged pieces of equipment under site conditions.

The Teekay Flange Adaptor acts as a flexible connection protecting expensive equipment from the stresses and strains of rigid joints. Additionally the rubber sealing sleeve of the Teekay Flange Adaptor dampens vibration and noise.

Tied or harnessed Teekay Flange Adaptors can be readily supplied: the flange acting as an anchor is connected by threaded tie rods through the bolt holes to a puddle flange or lugs welded back along the pipe.

Teekay Stepped flange Adaptors are also available. For steps up to 25mm the flange adaptor can be supplied with a Teekay Stepped Coupling as the connecting coupling or, for larger steps, the spigot on the flange adaptor can be replaced by a Teekay Reducer.

Teekay Flange Adaptors are generally produced from steel to BS4360 43a and are 100% coated internally and externally with Rilsan, Fusion Bonded Epoxy or are galvanised. For special applications, stainless steel flange adaptors are also available. The connecting coupling is usually supplied in compatible materials as listed below.

TEEKAY FLANGE ADAPTORS MATERIAL SELECTION GUIDE

Type	I	II	IV	V	VI
Casing	AISI 304 DIN 1.4301	AISI 304 DIN 1.4301	AISI 316L DIN 1.4404	*Coated High Strength Steel	*Coated High Strength Steel
Fasteners	Alloy Steel Zinc + PTFE Coated	AISI 316L DIN 1.4404	AISI 316L DIN 1.4404	Alloy Steel Zinc Coated	AISI 316L DIN 1.4404
Gasket	EPDM/NBR/ Viton	EPDM/NBR/ Viton	EPDM/NBR/ Viton	EPDM/NBR/ Viton	EPDM/NBR/ Viton

*** Galvanized, Rilsan, PVC or Epoxy (Scotchkote)**

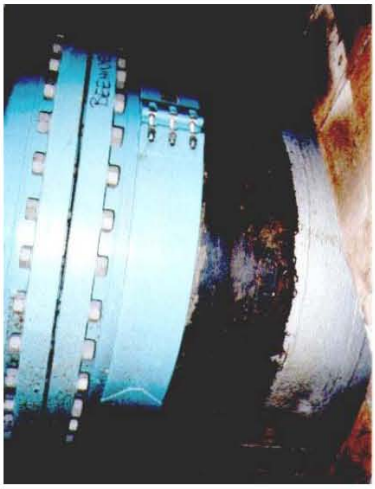

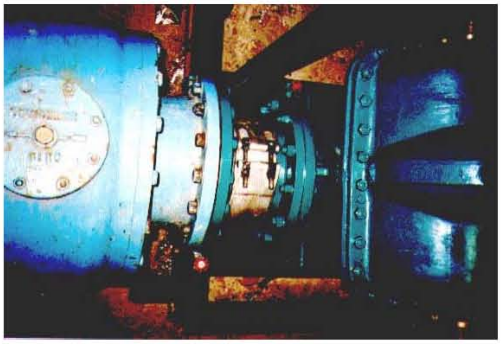

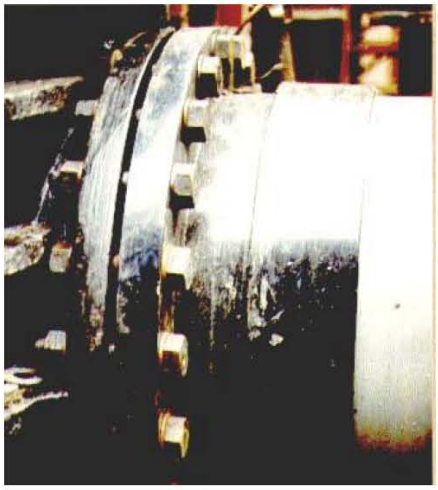

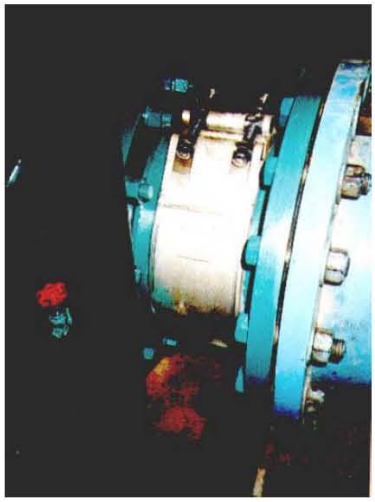

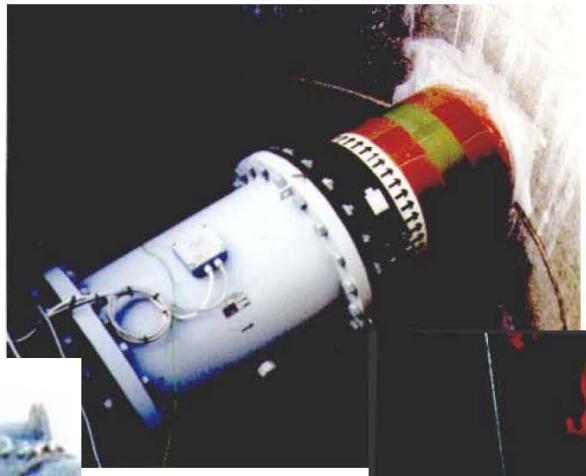

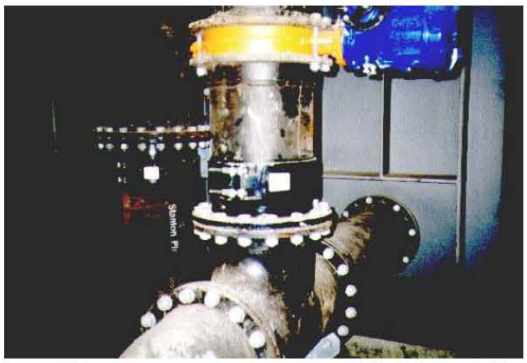

Stanton

DIMENSIONS

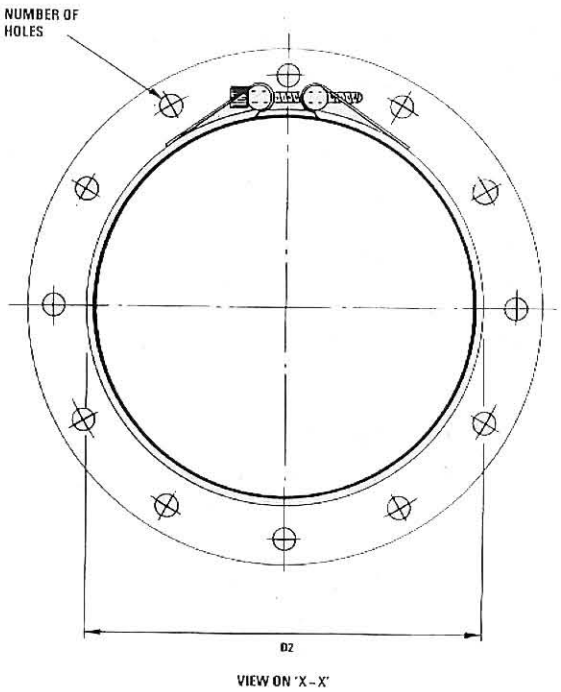

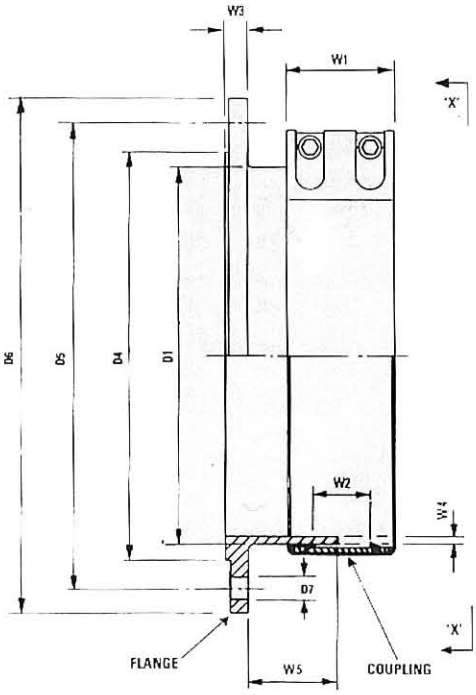

TEEKAY FLANGE ADAPTORS
TO SUIT FLANGES DRILLED BS 4504 NP25 **(25 BAR)**

PIPE DETAILS		COUPLING DETAILS				SPIGOT DETAILS		FLANGE DETAILS							APPROX WEIGHT
NOM PIPE SIZE	D1 PIPE OD	D2 COUPLING OD=(D1+D2)	W1 COUPLING WIDTH	W2 GAP BETWEEN SEALING LIPS	NO OF SCREWS	W5 LENGTH OF SPIGOT	W4 SPIGOT THICKNESS	D4 RAISED FACE DIAMETER	D5 PITCH CIRCLE DIAMETER	D6 FLANGE OD	D7 BOLT HOLE DIAMETER	W3 FLANGE THICKNESS	NO OF BOLTS	BOLT DIAMETER	KGS
50	TEEKAY FLANGE ADAPTORS CAN BE MANUFACTURED TO SUIT ANY PIPE OUTSIDE DIAMETER	22	110	67	2	120	6	102	125	165	18	20	4	M16	5.0
65		22	110	67	2	120	6	122	145	185	18	22	8	M16	7.5
80		22	110	67	2	120	6	138	160	200	18	24	8	M16	9.0
100		22	110	67	2	120	6	162	190	235	22	26	8	M20	10.5
125		22	110	67	2	120	6	188	220	270	26	28	8	M24	12.0
150		28	140	80	2	150	6	218	250	300	26	28	8	M24	13.5
175		28	140	80	2	150	6	248	280	330	26	28	12	M24	14.2
200		28	140	80	2	150	6	278	310	360	26	28	12	M24	18.5
250		28	140	80	2	153	6	335	370	425	30	32	12	M27	24.9
300		28	140	80	2	147	6	395	430	485	30	38	16	M27	34.0
350		28	140	80	2	143	6	450	490	555	33	42	16	M30	53.0
400		28	140	80	2	159	6	505	550	620	36	46	16	M33	65.0
450		28	140	80	2	153	6	555	600	670	36	52	20	M33	84.5
500		28	140	80	2	147	6	615	660	730	36	58	20	M33	102.8
600		28	140	80	2	139	6	720	770	845	39	66	20	M36	146.3

E&OE 251101

TEEKAY FLANGE ADAPTORS

TO SUIT FLANGES DRILLED BS 4504 NP16 DIN 2532 PN16 BS4772 NP16 **(16BAR)**

PIPE DETAILS		COUPLING DETAILS				SPIGOT DETAILS		FLANGE DETAILS							APPROX WEIGHT
NOM PIPE SIZE	D1 PIPE OD	D2 COUPLING OD=(D1+D2)	W1 COUPLING WIDTH	W2 GAP BETWEEN SEALING LIPS	NO OF SCREWS	W5 LENGTH OF SPIGOT	W4 SPIGOT THICKNESS	D4 RAISED FACE DIAMETER	D5 PITCH CIRCLE DIAMETER	D6 FLANGE OD	D7 BOLT HOLE DIAMETER	W3 FLANGE THICKNESS	NO OF BOLTS	BOLT DIAMETER	KGS
50	TEEKAY FLANGE ADAPTORS CAN BE MANUFACTURED TO SUIT ANY PIPE OUTSIDE DIAMETER	20	85	42	2	95	3	102	125	165	18	18	4	M16	5.0
65		20	85	42	2	95	3	122	145	185	18	18	4	M16	6.0
80		20	85	42	2	95	6	138	160	200	18	20	8	M16	6.3
100		20	85	42	2	95	6	158	180	220	18	20	8	M16	7.8
125		20	85	42	2	95	6	188	210	250	18	22	8	M16	10.2
150		22	110	67	2	120	6	212	240	285	22	22	8	M20	13.5
175		22	110	67	2	120	6	242	270	315	22	24	8	M20	15.8
200		22	110	67	2	120	6	268	295	340	22	24	12	M20	17.5
250		22	110	67	2	130	6	320	355	405	26	25	12	M24	21.2
300		28	140	80	2	160	6	FF	410	460	26	25	12	M24	30.0
350		28	140	80	2	160	6	FF	470	520	26	25	16	M24	36.5
400		28	140	80	2	160	6	FF	525	580	30	25	16	M27	42.7
450		28	140	80	2	160	6	FF	585	640	30	25	20	M27	50.5
500		28	140	80	2	160	6	FF	650	715	33	25	20	M30	62.2
600		28	140	80	2	160	6	FF	770	840	36	25	20	M33	78.0
700		42	210	120	3	230	6	FF	840	910	36	25	24	M33	90.5
800		42	210	120	3	230	8	FF	950	1025	39	25	24	M36	118.4
900		42	210	120	3	230	8	FF	1050	1125	39	25	28	M36	131.0
1000		42	210	120	3	230	10	FF	1170	1255	42	25	28	M39	154.7
1200		42	210	120	3	217	10	FF	1390	1485	48	38	32	M45	251.0

TEEKAY FLANGE ADAPTORS

TO SUIT FLANGES DRILLED BS 4504 NP10 DIN 2532 PN10 BS4772 NP10 (**10 BAR**)

PIPE DETAILS		COUPLING DETAILS				SPIGOT DETAILS		FLANGE DETAILS							APPROX WEIGHT
NOM PIPE SIZE	D1 PIPE OD	D2 COUPLING OD=(D1+D2)	W1 COUPLING WIDTH	W2 GAP BETWEEN SEALING LIPS	NO OF SCREWS	W5 LENGTH OF SPIGOT	W4 SPIGOT THICKNESS	D4 RAISED FACE DIAMETER	D5 PITCH CIRCLE DIAMETER	D6 FLANGE OD	D7 BOLT HOLE DIAMETER	W3 FLANGE THICKNESS	NO OF BOLTS	BOLT DIAMETER	KGS
50	TEEKAY FLANGE ADAPTORS CAN BE MANUFACTURED TO SUIT ANY PIPE OUTSIDE DIAMETER	20	85	42	2	95	3	102	125	165	18	18	4	M16	4.2
65		20	85	42	2	95	3	122	145	185	18	18	4	M16	4.7
80		20	85	42	2	95	6	138	160	200	18	20	8	M16	6.8
100		20	85	42	2	95	6	158	180	220	18	20	8	M16	7.9
125		20	85	42	2	95	6	188	210	250	18	22	8	M16	9.7
150		22	110	67	2	120	6	212	240	285	22	22	8	M20	12.4
175		22	110	67	2	120	6	242	270	315	22	24	8	M20	14.4
200		22	110	67	2	120	6	268	295	340	22	24	8	M20	15.9
250		22	110	67	2	130	6	320	350	395	22	25	12	M20	18.9
300		22	110	67	2	130	6	370	400	445	22	25	12	M20	21.8
350		28	140	80	2	160	6	FF	460	505	22	25	16	M20	34.0
400		28	140	80	2	160	6	FF	515	565	26	25	16	M24	40.0
450		28	140	80	2	160	6	FF	565	615	26	25	20	M24	45.3
500		28	140	80	2	160	6	FF	620	670	26	25	20	M24	50.1
600		28	140	80	2	160	6	FF	725	780	30	25	20	M27	62.7
700		42	210	120	3	230	6	FF	840	895	30	25	24	M27	86.2
800		42	210	120	3	230	8	FF	950	1015	33	25	24	M30	115.2
900		42	210	120	3	230	8	FF	1050	1115	33	25	28	M30	127.5
1000		42	210	120	3	230	10	FF	1160	1230	36	25	28	M33	144.9
1200		42	210	120	3	217	10	FF	1380	1455	39	38	32	M36	229.8
1400		42	210	120	6	217	10	FF	1570	1675	43	38	36	M39	316.5
1600		42	210	120	6	245	10	FF	1820	1915	49	60	40	M45	529.3

E&OE 251101

TEEKAY FLANGE ADAPTORS

TO SUIT FLANGES DRILLED BS 4504 NP6 (**6BAR**)

PIPE DETAILS		COUPLING DETAILS				SPIGOT DETAILS		FLANGE DETAILS							APPROX WEIGHT
NOM PIPE SIZE	D1 PIPE OD	D2 COUPLING OD=(D1+D2)	W1 COUPLING WIDTH	W2 GAP BETWEEN SEALING LIPS	NO OF SCREWS	W5 LENGTH OF SPIGOT	W4 SPIGOT THICKNESS	D4 RAISED FACE DIAMETER	D5 PITCH CIRCLE DIAMETER	D6 FLANGE OD	D7 BOLT HOLE DIAMETER	W3 FLANGE THICKNESS	NO OF BOLTS	BOLT DIAMETER	KGS
50	TEEKAY FLANGE ADAPTORS CAN BE MANUFACTURED TO SUIT ANY PIPE OUTSIDE DIAMETER	20	85	42	2	95	3	90	110	140	14	16	4	M12	3.5
65		20	85	42	2	95	3	110	130	160	14	16	4	M12	4.0
80		20	85	42	2	95	6	128	150	190	18	18	4	M16	5.1
100		20	85	42	2	95	6	148	170	210	18	18	4	M16	6.4
125		20	85	42	2	95	6	178	200	240	18	20	8	M16	8.1
150		22	110	67	2	120	6	202	225	265	18	20	8	M16	9.5
200		22	110	67	2	120	6	258	280	320	18	22	8	M16	12.9
250		22	110	67	2	120	6	312	335	375	18	24	12	M16	15.9
300		22	110	67	2	120	6	365	395	440	22	24	12	M20	19.5
350		28	140	80	2	160	6	415	445	490	22	24	12	M20	31.7
400		28	140	80	2	160	6	FF	495	540	22	25	16	M20	36.6
450		28	140	80	2	160	6	FF	550	595	22	25	16	M20	41.5
500		28	140	80	2	160	6	FF	600	645	22	25	20	M20	45.0
600		28	140	80	2	160	6	FF	705	755	26	25	20	M24	56.7
700		42	210	120	3	230	6	FF	810	860	26	25	24	M24	76.6
800		42	210	120	3	230	8	FF	920	975	30	25	24	M27	102.7
900		42	210	120	3	230	8	FF	1020	1075	30	25	24	M27	113.7
1000		42	210	120	3	230	10	FF	1120	1175	30	25	28	M27	124.0
1200		42	210	120	3	217	10	FF	1340	1405	33	38	32	M30	195.6
1400		42	210	120	6	217	10	FF	1560	1630	36	38	36	M33	280.9
1600		42	210	120	6	245	10	FF	1760	1830	36	60	40	M33	409.0
1800		42	210	120	6	245	15	FF	1970	2045	39	60	44	M36	511.1
2000		42	210	120	6	245	15	FF	2180	2265	42	60	48	M39	597.8

TEEKAY FLANGE ADAPTORS

TO SUIT FLANGES DRILLED BS 4504 NP2.5 (**2.5 BAR**)

PIPE DETAILS		COUPLING DETAILS				SPIGOT DETAILS		FLANGE DETAILS							APPROX WEIGHT
NOM PIPE SIZE	D1 PIPE OD	D2 COUPLING OD=(D1+D2)	W1 COUPLING WIDTH	W2 GAP BETWEEN SEALING LIPS	NO OF SCREWS	W5 LENGTH OF SPIGOT	W4 SPIGOT THICKNESS	D4 RAISED FACE DIAMETER	D5 PITCH CIRCLE DIAMETER	D6 FLANGE OD	D7 BOLT HOLE DIAMETER	W3 FLANGE THICKNESS	NO OF BOLTS	BOLT DIAMETER	KGS
1200	TEEKAY FLANGE ADAPTORS CAN BE MANUFACTURED TO SUIT ANY PIPE OUTSIDE DAIAMETER	42	210	120	3	219	10	1280	1320	1375	30	36	32	M27	164.2
1400		42	210	120	6	213	10	1480	1520	1575	30	42	36	M27	225.4
1600		42	210	120	6	259	10	1690	1730	1790	30	46	40	M27	281.4
1800		42	210	120	6	253	15	1890	1930	1990	30	52	44	M27	356.5
2000		42	210	120	6	247	15	2090	2130	2190	30	58	48	M27	446.2

Other flange tables and drillings such as BS10 Tables A-E or BS1506/ANSI B16.5 Classes 150 and 300 can be supplied as standard. Different or non-standard drillings are also readily available. Dimensions for these are available from the Teekay Technical Department.